Name: **BME 105 Exam 1**
CruzID:

BME 105 Genetics in the Genomics Era
Exam 1, 50 pts

Instructions:

- Read each problem carefully and answer the question in the space provided.
- Write your name on every page of the exam - they will be scanned in and processed by question - we must have your name for you to receive credit.
- You may use a calculator.
- The exam is closed book, closed note. No cell phones, tablets, or laptop computers are allowed to be used. You have the full class time to take the exam.

1) All cellular life converts genotype to phenotype through the central dogma, whereby DNA is transcribed into mRNA and then translated into protein (8 pts total).
   a) Is RNA transcribed from the coding strand or template strand of DNA? (2 pts)

   b) Does all life on earth use the same genetic code? Yes or no. (1 pts)

   (mitos have their own, as do bacteria)

   Using the standard genetic code in the table below, answer the following questions:

1st letter	Second Letter: U	Second Letter: C	Second Letter: A	Second Letter: G	3rd letter
U	UUU Phe UUC UUA Leu UUG	UCU UCC Ser UCA UCG	UAU Tyr UAC UAA Stop UAG Stop	UGU Cys UGC UGA Stop UGG Trp	U C A G
C	CUU CUC Leu CUA CUG	CCU CCC Pro CCA CCG	CAU His CAC CAA Gln CAG	CGU CGC Arg CGA CGG	U C A G
A	AUU AUC Ile AUA AUG Met	ACU ACC Thr ACA ACG	AAU Asn AAC AAA Lys AAG	AGU Ser AGC AGA Arg AGG	U C A G
G	GUU GUC Val GUA GUG	GCU GCC Ala GCA GCG	GAU Asp GAC GAA Glu GAG	GGU GGC Gly GGA GGG	U C A G

   c) What is the translated sequence of the following DNA template strand: 5'-TTATAGACATGG-3' ? (4 pts)

   CCA TGT CTA TAA
   Pro Cys Leu STOP

   d) Where in the gene is this sequence? (1 pt)

   end

Name: **BME 105 Exam 1**
CruzID:

2) Genetics study systems (5 pts total):
   a) What two key aspects are essential to include in a genetic model system? (Hint: what was so special about Mendel's peas?) (3 pts)

      A breedable organismal system
      Observable, heritable phenotypic variation that can be organized into "true breeding types"

   b) What are some convenient, but not essential aspects of an ideal genetic model system? <u>List at least two</u> (2 pts)

      Short generation time
      Generates large numbers of progeny
      Easy to grow
      Easy to inbreed (e.g., hermaphroditic systems)

3) You are given a pea plant that has yellow peas and want to know if it is true breeding or hybrid. You know that yellow peas is a dominant trait, so it's not immediately clear if the plant is YY or Yy. Describe two ways you could ascertain the genotype of this plant. You may use approaches available in Mendel's day, as well as modern techniques (3 pts).

Perform a hermaphroditic cross to see if the F1 generation contains ¼ green offspring (selfing parent is heterozygous) or not (parent is homozygous).
Test cross with known homozygous recessive plants
Genotype the yellow locus - we know the green/yellow alleles, so SNP chips or PCR + Sanger sequencing could work
Sequence the yellow locus - brute force, but not wrong

4) Use the following pedigree to answer the questions below. Filled circles indicate individuals with the trait. (8 pts)

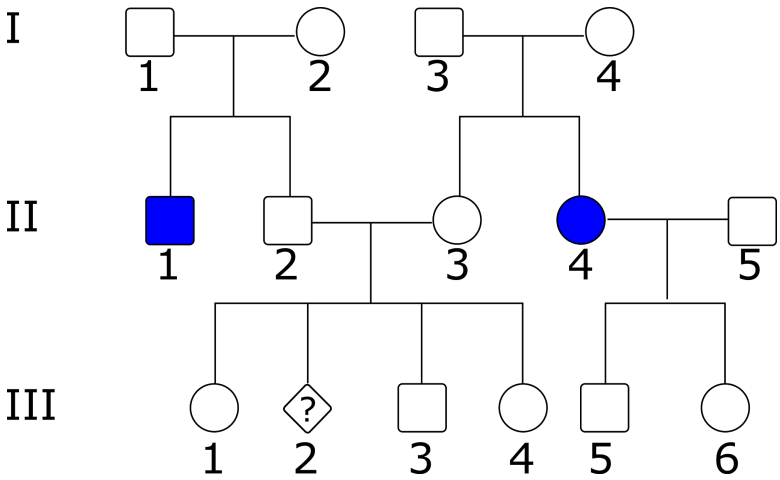

   a) What is the mode of trait inheritance (2 pts) ?

      autosomal recessive

   b) What is the probability that individual II-2 is a carrier (2 pts)?

      P(Aa I not aa) = 2/3 (options are Aa, aA, and AA --> 2/3 are heterozygous)

c) What is the probability that individuals II-2 and II-3 have a child affected with the trait (2 pts)?

P(III-2 aa) = 2/3*1/2 * 2/3*1/2 = 1/9

II-2 chance of carrier * chance of transmission of allele a * II-3 chance of carrier * chance of transmission of allele a

d) Does the sex of individual III-2 impact their probability of being affected with the trait? Yes or no. (2 pts)

no

5) Duchenne muscular dystrophy (DMD) is caused by a rare X-linked recessive allele. It results in progressive muscular wasting and usually leads to death before age 20 (6 pts total).

- A young couple both have DMD in their family and want to know their chances of having an affected child.
- They both have siblings affected by the disease (the woman's brother and the man's sister), but they themselves are unaffected.
- The woman's parents are unaffected, but the man's biological father was affected.

a) Draw a pedigree for this couple, their parents, and their siblings (2 pts).

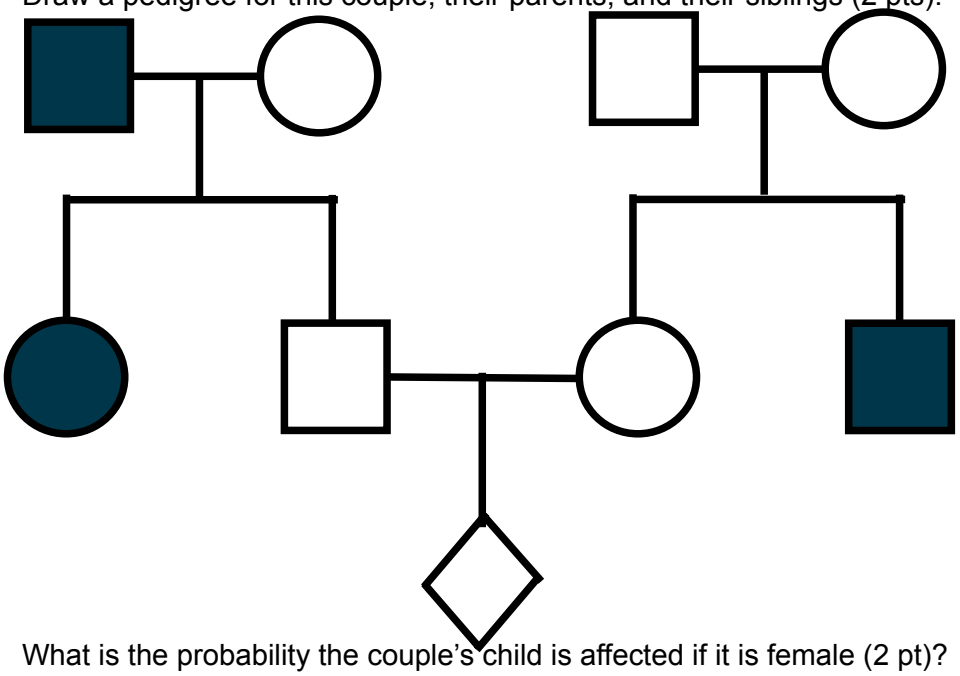

b) What is the probability the couple's child is affected if it is female (2 pt)?

p=0
because the father is unaffected and cannot be a carrier
(and so transmits a functional X to all of his daughters)

c) What is the probability the couple's child is affected if it is male (2 pt)?

p=0.25
= 0.5 chance of the mother being Dd * 0.5 chance the d is transmitted
because males get one x from their moms, if the mom transmits the d allele, the son will be affected

6) Genotyping disease alleles: A patient presents with a rare recessive disease. You have at your disposal the following methods. Match them to the situations below. You can use each one more than once (6 pts total):
    1. SNP chip
    2. PCR + sanger sequencing
    3. PCR + gel (for microsatellite amplicon length)
    4. Illumina shotgun whole genome sequencing
    5. PacBio/Nanopore shotgun whole genome sequencing

    a) Situation 1: There is some family history of a known SNP in a gene that causes this disease. Name <u>two</u> specific techniques you could use to determine the genotype of the individual. (2 pts)

    SNP chip, given the panel contains probes against the allele
    PCR + sanger sequencing for any allele
    Allele-specific PCR (I doubt this one will be suggested, but we might have some students with research backgrounds who know about this or reason it is possible - the idea is kinda like a SNP chip)

    b) Situation 2: There is no family history, but the presentation of the disease is mostly found when a specific gene is mutated and that gene has SNVs. Name <u>two</u> specific techniques you could use to determine the genotype of the individual. (2 pts)

    PCR + Sanger sequencing for any allele
    Illumina shotgun whole genome sequencing
    PacBio/Nanopore shotgun whole genome sequencing

    (The allele is unknown -
    Not snp chip or PCR for microsatellite)

    c) Situation 3: You know nothing about the genetic basis of the disease. Name <u>one</u> specific technique you could use to determine the genotype of the individual. (2 pts)

    Illumina shotgun whole genome sequencing
    PacBio/Nanopore shotgun whole genome sequencing

    (The allele could be anywhere, of any kind (snp, indel, cnv, etc) -
    Not SNP chip, PCR for microsatellite, PCR + Sanger sequencing)

7) How are the genetic laws of independent segregation and assortment dictated by biological mechanisms? (4 pts)

The independent segregation of parental alleles is determined during meiosis.

The independent assortment of traits is determined by the localization of genes on different chromosomes.

8) Draw the metaphase stage of mitosis for a diploid cell with the following genotype: D/d; E/e. (5 pts)

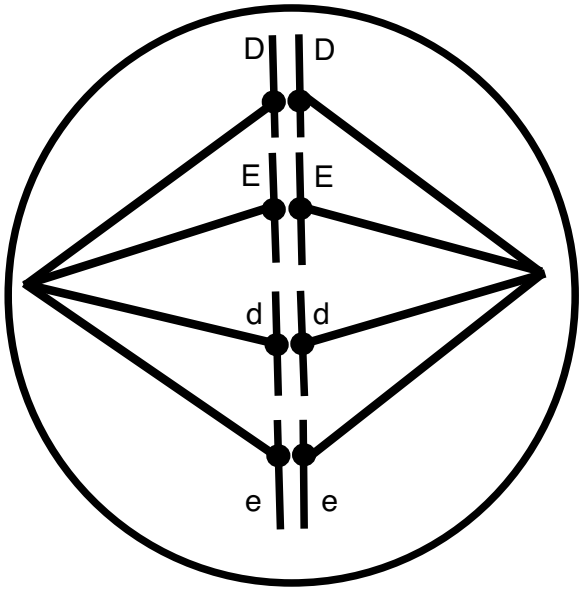

9) The arrangement of homologous chromosomes on the metaphase I plate of meiosis introduces variability in gamete genotypes. A diploid organism with two chromosomes is heterozygous for two genes, one on each chromosome. Use the genotype: D/d; E/e.

Write the alleles carried by four gametes after a single meiosis event. There are two possible correct answers. It would be helpful to draw out the products of meiosis I and II. (5 pts)

· EITHER:
dE dE De De

OR:
DE DE de de